3
CHANNELS

- OLED display
- 8 bit / 16 bit
- 3 kinds of DMX interfaces
- Dimming curve: 0.1~9.9
- Short circuit / Over current / Over-heat protection

D3

DMX512 DECODER

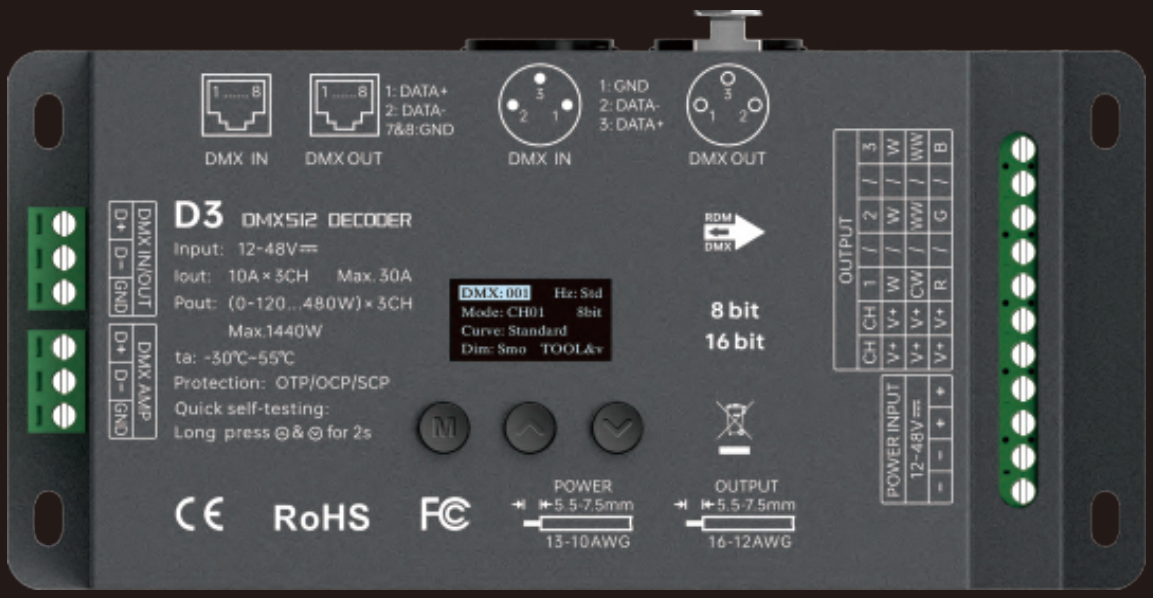

RDM DMX FC CE RoHS 5-year warranty

Product introduction

1、Designed for Hi-power multiple channels application, 3 channels output, and Max. 10A current per channel, up to 1440W output power.

2、The human-computer interaction interface is composed of an OLED screen and 3 buttons, which displays rich content and is simple and fast to operate.

3、The number of DMX channels can be set to CH01/CH02/CH03, which can realize independent address independent channel control, or one address to control multiple channels.

4、The PWM frequency can be set to 300/600/1200/1500/1800/2400/3600/7200/10800/14400/18000Hz;

5、Features three DMX interfaces: 3-pin XLR, green terminal, and RJ45, enhancing signal transmission efficiency and interference resistance. The green terminal additionally provides signal amplification.

6、With the operations can be completed via the RDM master console, such as parameters browsing & settings, DMX address settings,equipment recognition, etc.

7、DMX master control mode;

8、With firmware upgrade function.

9、With short circuit, over current and over temp. protection, as well as warning function when a fault occurs.

10、With power-on state management and fast self-testing function.

11、16bit (65536 levels) / 8bit (256 levels) grey level available.

12、Available for standard, linear, LOG or custom 0.1-9.9 dimming curve.

13、The device has 10 built-in personalized lighting effects. You can enter the setting interface of the DMX master mode and select different lighting effects to achieve precise output control of other decoders.

14、Parameters can be set and modified through the RDM master control or mobile phone APP, eliminating the need for high-altitude operations.

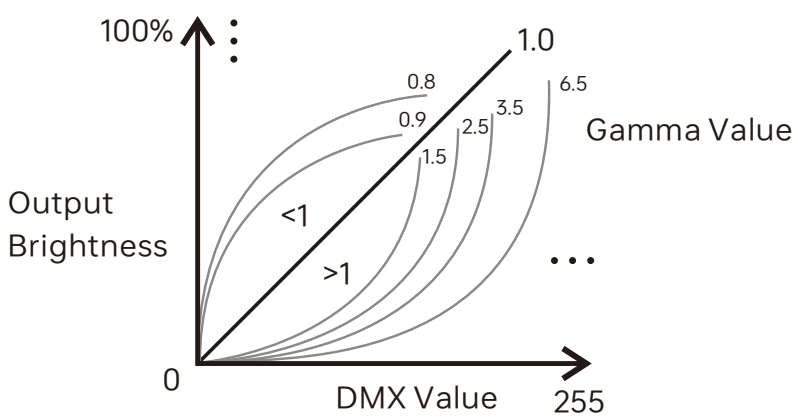

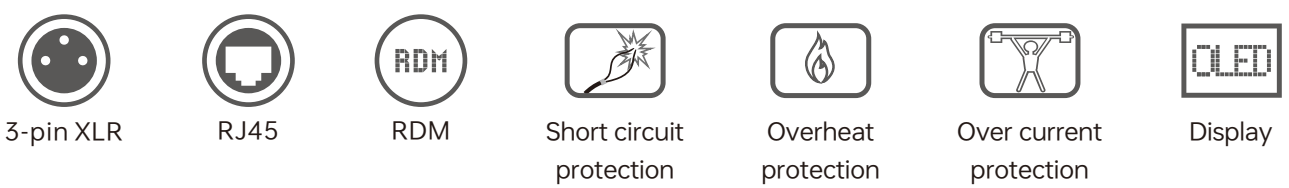

Technical Specs

Model:	D3
Input Signal:	DMX512/RDM
Input Voltage:	12- 48Vdc
Current Load:	10A × 3CH Max. 30A
Output Power:	(0~120W...480W) × 3CH Max. 1440W
DMX Interface:	3-pin XLR, RJ45, green terminal
Control Mode:	DIM/CT/RGB
Dimming Curve:	0.1~9.9, standard, linear, LOG
Grey Level:	8bit (256 levels) / 16bit (65536 levels)
Protection:	Short circuit / Over current / Over-heat protection, recover automatically
Working Temperature:	-30°C~55°C
Dimensions:	L169×W80×H39mm
Package Size:	L182×W91×H41mm
Weight (G.W.):	550g

Unit: mm

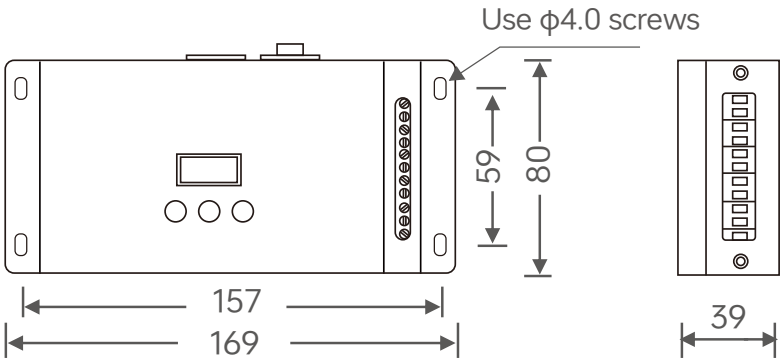

RDM DMX FC CE RoHS 5-Year Warranty

Main Component Descripition

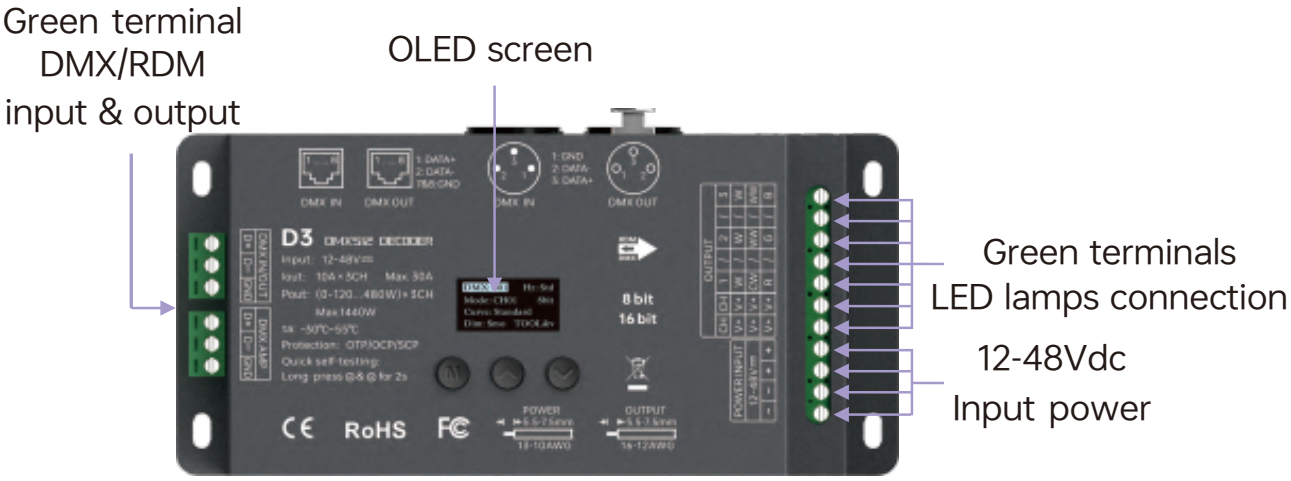

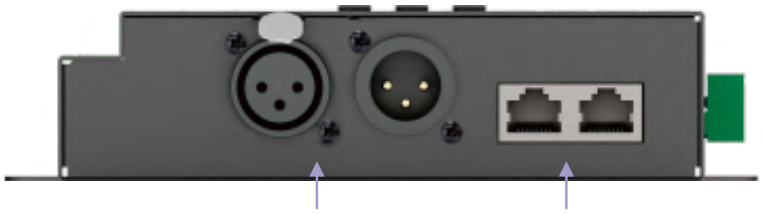

OLED Screen Interface

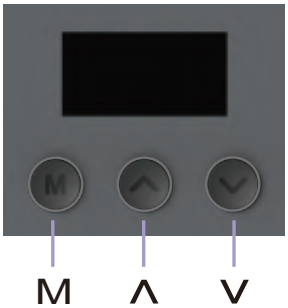

Press "M" key, switch entries.

Long press "M" key, back to main page.

Press " " or " " key, parameter adjustment.
Exit: back to previous page.

1、DMX address settings

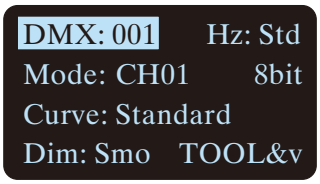

Main page

Press “∧” or“∨” key to set DMX address.

Range: 001~512,Default display 001

2、PWM frequency

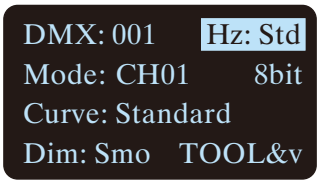

Press M and press “∧” or“∨”key to select

Available:

300Hz	600Hz	1200Hz
1500Hz	1800Hz	2400Hz
3600Hz	7200Hz	10800Hz
14400Hz	18000Hz	Std(acquiesce)

3、Number of DMX channels

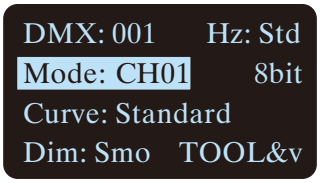

Press M and press “∧” or“∨”key to select

Available:

CH01、CH02、CH03(acquiesce)

4、Grey scale

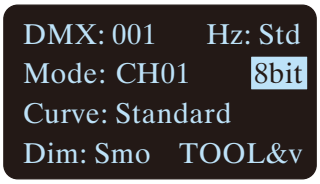

Press M and press“∧” or“∨”key to select

Available: 8bit、16bit，8bit(acquiesce)

5、Dimming curves

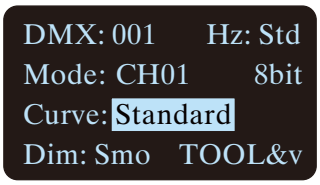

Press M and press“∧” or“∨”key to select

Available: Standard
Linear
Log
0.1~9.9

* It is recommended to use standard, 0.1-9.9 is for special requirements.

6、Enhance dimming

DMX: 001 Hz: Std
Mode: CH01 8bit
Curve: Standard
Dim: Smo TOOL&v

Press M and press“∧” or“∨”key to select

Available: Std (standard)
Smo (smooth)

* It is recommended to use standard.

Smo: This option with smooth processing, realizes flicker-free dimming and smooth dynamic effects.

7、Tool

DMX: 001 Hz: Std
Mode: CH01 8bit
Curve: Standard
Dim: Smo TOOL&v

Press “∧” or“∨” key to enter submenu.

Screen: ON+Addr
Contrast: 40%
Beep: ON TEST&v
MASTER&v EXIT&v

Screensaver
Screen brightness
Buzzer switch

Control Mode

Test
Quit

Press M and press“∧” or“∨”key to selectThe Test submenu is displayed

001

Screen: ON+Addr
Screensaver open and display addres without operating in two minutes

Screen: ON+black
Screensaver open and black without operating in two minutes

DMX: 001 Hz: Std
Mode: CH01 8bit
Curve: Standard
Dim: Smo TOOL&v

Screen: OFF
Screensaver not enable

Type: MASTER
Mode: Black
Bright: 255
Speed: 5 EXIT &V

Type: Decoder
Mode: Black
Bright: 255
Speed: 5 EXIT &V

Type: Slaver
Mode: Black
Bright: 255
Speed: 5 EXIT &V

Can set
Light display effect
Speed class
Brightness level

CH01: 255
CH02: 255
CH03: 255 [∧&V]
EXIT &V

Brightness setting (range: 0~255)
Press “∧” or“∨” to next page.
Press“∨” to exit.

ALL: 255
[∧&V]
EXIT &V

Change all value simultaneously. (on the last page)

* Fast self-testing function: press “∧” or“∨”keys simultaneously for 2-3 seconds under any page, decoder will enter self-testing function

Wiring Diagram

1 Connecting LED lights:

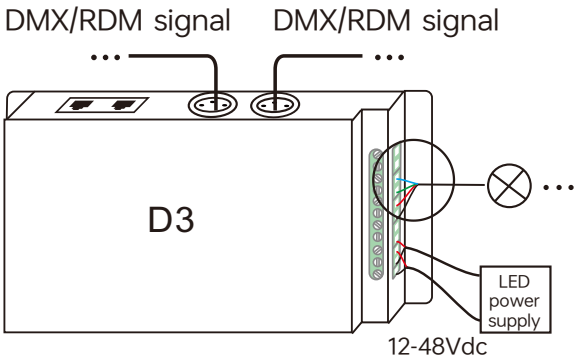

Dimming mode

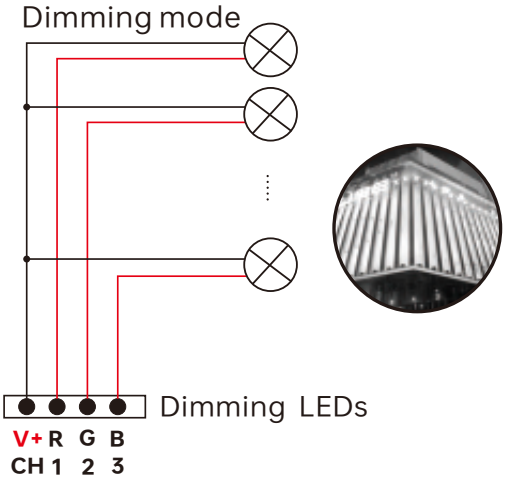

CT mode

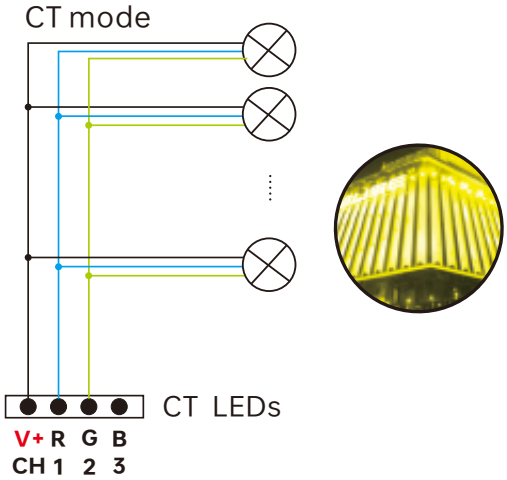

RGB mode

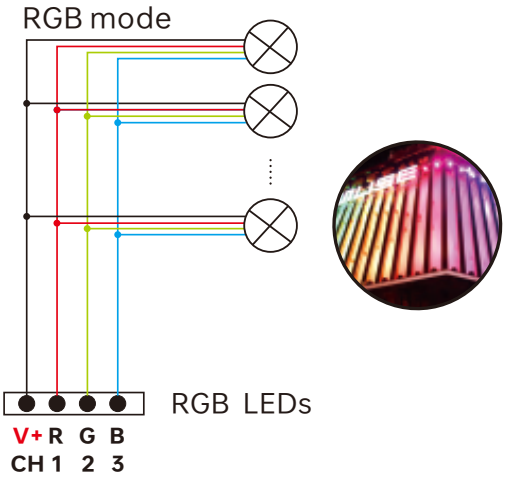

2. DMX console connection:

D3 is equipped with 3 types DMX terminals for users' selection. The following diagram takes 3-pin XLR as an example, same connecting method for the rest two: RJ45 & green terminal (with amplifier function).

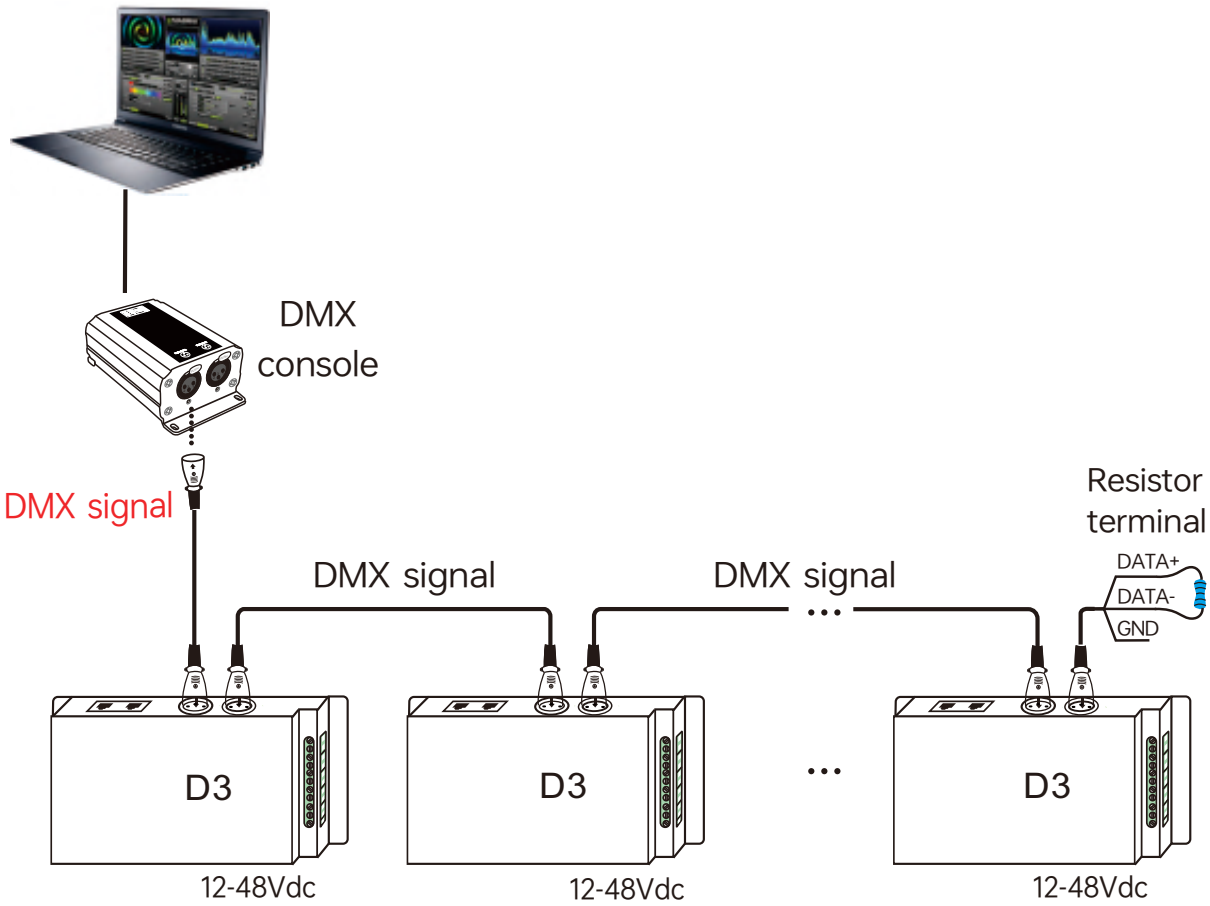

3.DMX Control Mode

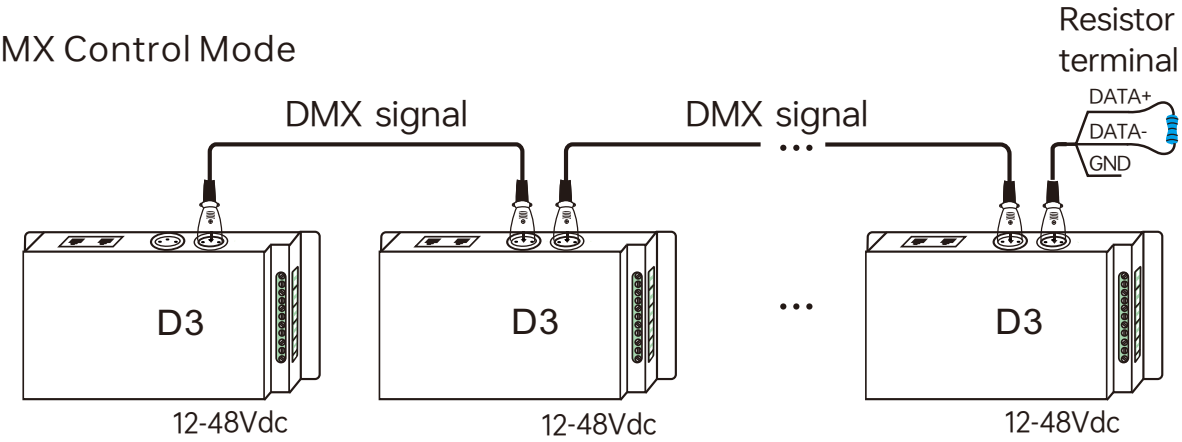

* If the recoil effect occurs because of longer signal line or bad line quality, please try to connect 0.25W 90-120Ω terminal resistor at the end of each line.

4. The connection diagram of 3 kinds of DMX/RDM terminals:

3-pin XLR connected in parallel

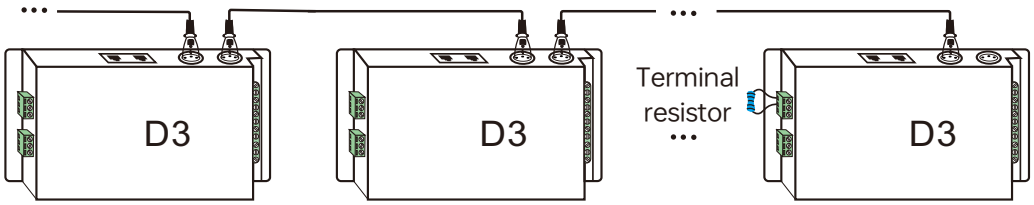

RJ45 connected in parallel

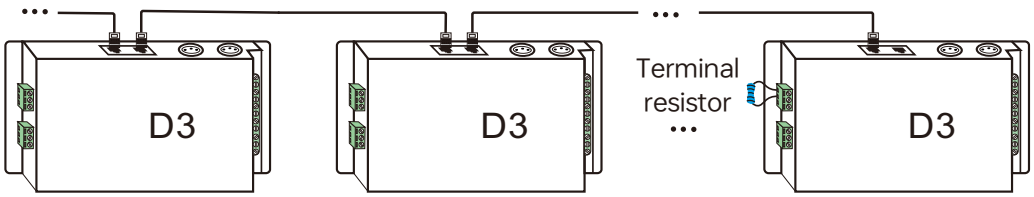

Green terminal connected in parallel

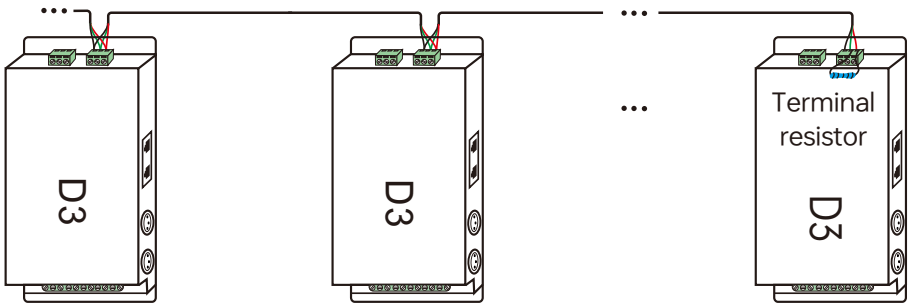

These 3 terminals can be connected in a mixed way.

5. The connection diagram of AMP signal amplifier terminal:

* Connecting with green terminal or an extra amplifier will be needed when more than 32 decoders are connected or use overlong signal wire(as shown below). Signal amplifier should not be more than 5 times continuously.

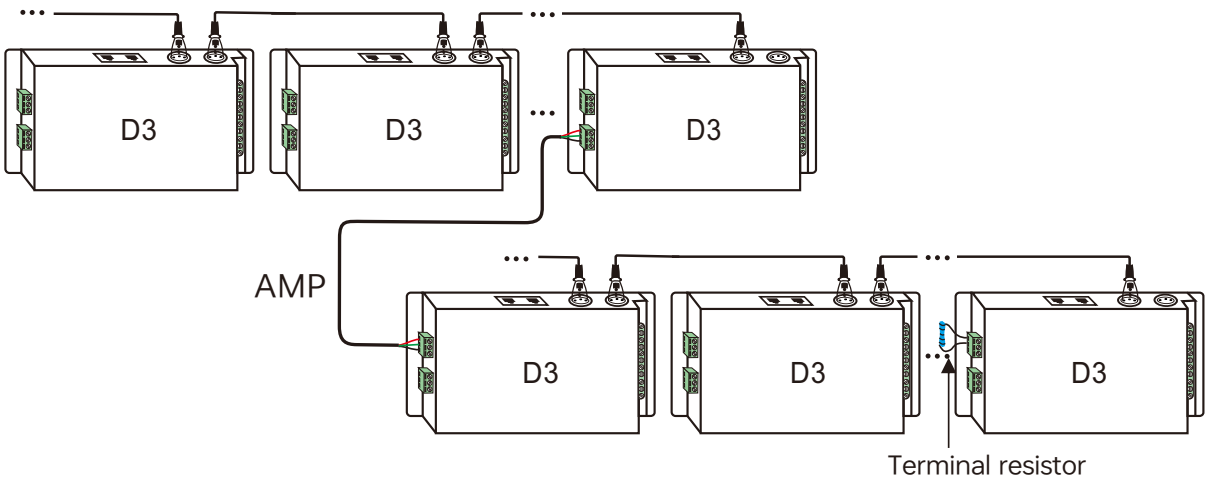

Address setting table

Mode		DIM	CT/CT2	RGB
Address Quantity		1	2	3
Resolution		8bit	8bit	8bit
Channel	1	001	001	001
	2	001	002	002
	3	001	001	003

Mode		DIM	CT/CT2	RGB
Address Quantity		2	4	6
Resolution		16bit	16bit	16bit
Channel	1	001 002	001 002	001 002
	2	001 002	003 004	003 004
	3	001 002	001 002	005 006

Work with RDM Editor

D3 can work with LTECH RDM editor (Model: WiFi-RDM01) to realize changing the parameters by long-range setting, wiring diagram as below:

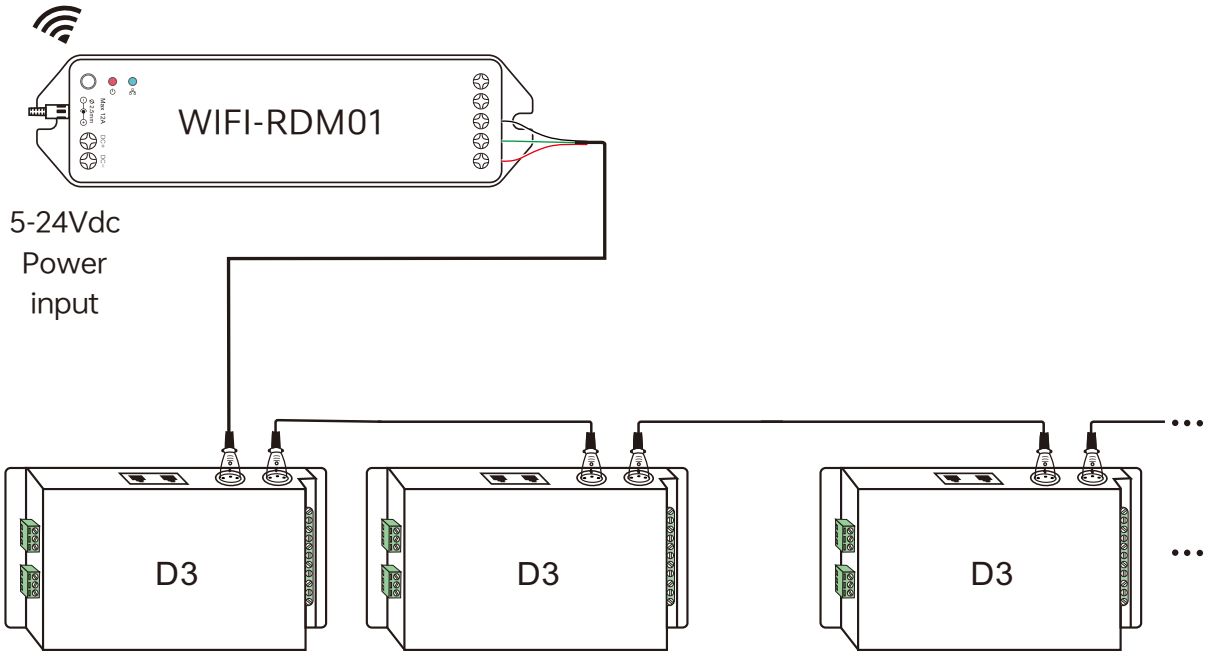

RDM editor App interface instruction

Download the App, setting the D3 parameters (frequency, bit, curve, modes, dimming range, screensaver, etc.) after well connecting the RDM editor, more details, please check the manual of WiFi-RDM01.

Well installation of products first, then working with WiFi -RDM01 to realize setting parameters and firmware upgrade by App.

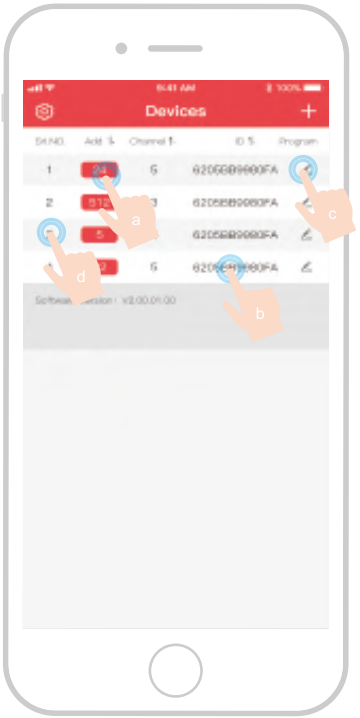

a: Click"Add", edit the address in corresponding box.

b: Click"ID", get more product details.

c: Click" ", enter edited interface.

d: Click"No.", issue the recognizing command.

Supporting WiFi-RDM01 upgrade and DMX driver upgrade.

Attention

- Product installation and commissioning should be done by a qualified professional.
- Our company products are and not lightningproof non-waterproof(special models excepted). Please avoid the sun and rain. When installed outdoors, please ensure they are mounted in a waterproof enclosure or in an area equipped with lightning protection devices.
- Good heat dissipation will prolong the working life of products. Please ensure good ventilation.
- Please check if the working voltage used complies with the parameter requirements of products.
- The diameter of wire used must be able to load the light fixtures you connect and ensure the firm wiring.
- Before you power on products, please make sure all the wiring is correct in case of incorrect connection that causes damage to light fixtures.
- If a fault occurs, please do not attempt to fix products by yourself. If you have any question, please contact your suppliers.

Warranty Agreement

- Warranty periods from the date of delivery: 5 years.
- Free repair or replacement services for quality problems are provided within warranty periods.

Warranty exclusions below:
Following conditions are not within the guarantee range of free repairing or replacement services:

- Beyond warranty periods.
- Any artificial damage caused by high voltage, overload, or improper operations.
- Products with severe physical damage.
- Damage caused by natural disasters and force majeure.
- Warranty labels and barcodes have been damaged.
- No any contract signed by our company.

1. Repair or replacement provided is the only remedy for customers. Our company is not liable for any incidental or consequential damage unless it is within the law.
2. Our company has the right to amend or adjust the terms of this warranty, and release in written form shall prevail.

* This manual is subject to changes without further notice. Product functions depend on the goods. Please feel free to contact our official distributors if you have any question.

Update Time: 12/12/2025_A0